PART NUMBER	DESCRIPTION	QTY.
988156	SQUARE STAINLESS STEEL FASCIA MOUNT 36" DRILLED TERMINAL POST	2
731366	STAINLESS SQUARE FIXED RADIUS TERMINAL POST CAP	2
731618	2" ROUND TOP RAIL FOR 2" ROUND SS RAILING SYSTEM	1
734756	END CAP FOR ROUND TERMINAL POSTS	2
986244	FACTORY SWAGED ASSEMBLIES	11
982222	STAINLESS STEEL SQUARE FASCIA MOUNT TERMINAL POST BRACKET	2
987487	POST HEX BOLT ATTACHMENT HARDWARE	8
723708	12-24 X 1/2" FLAT HEAD SCREW	8

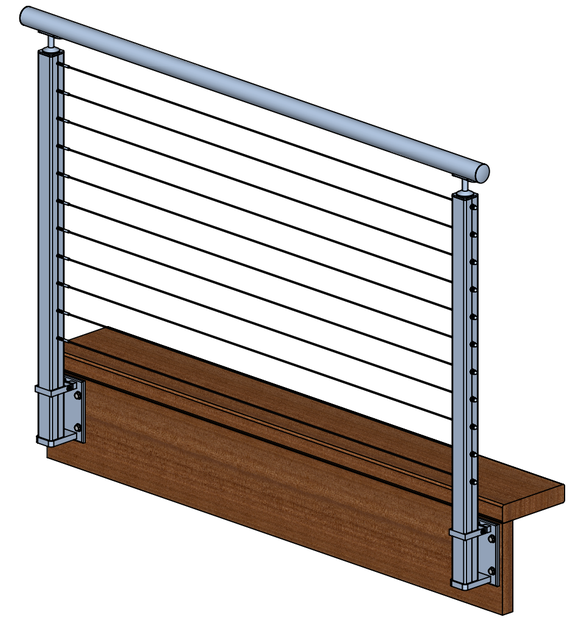

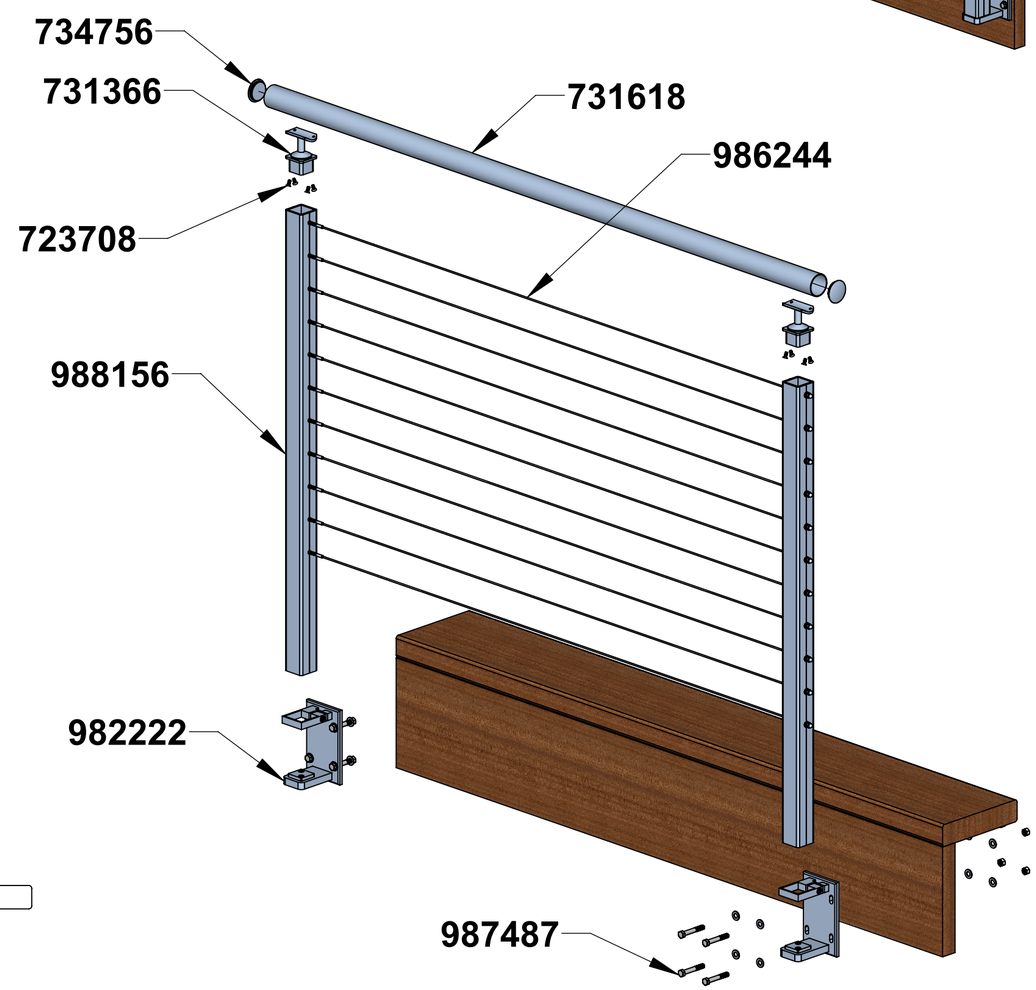

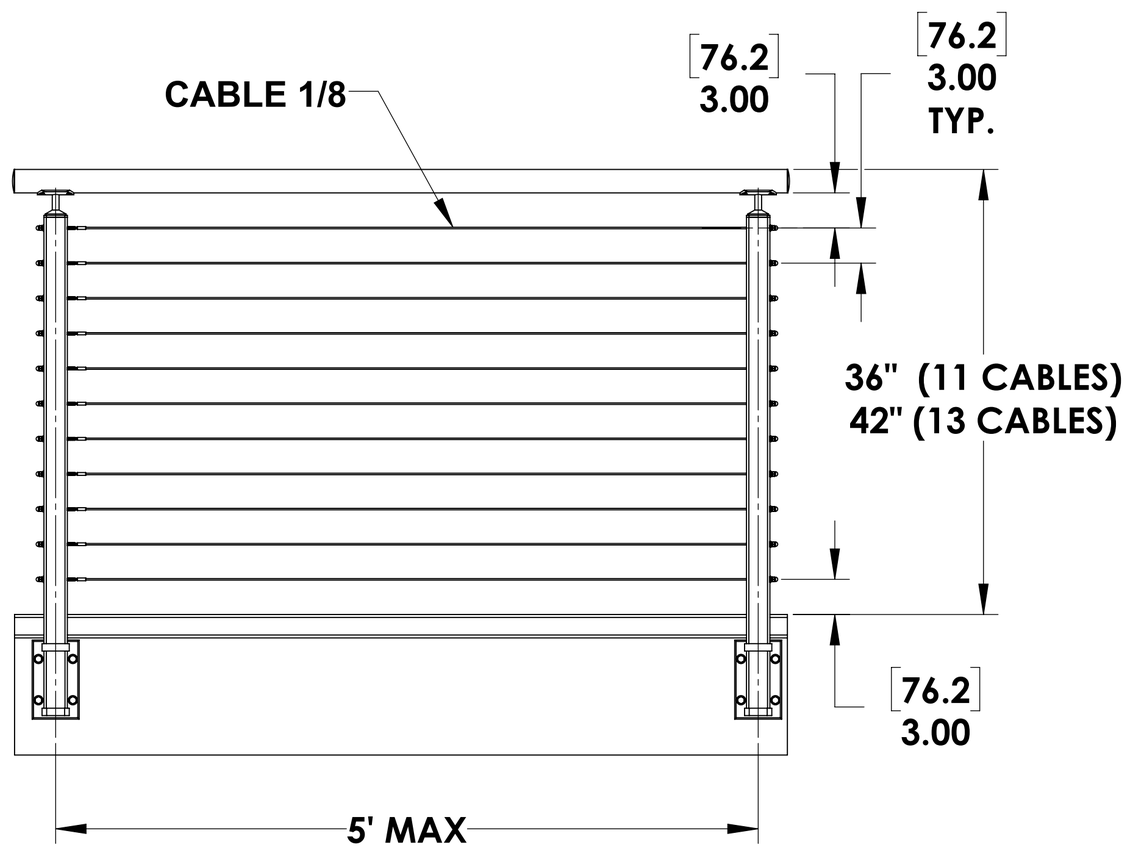

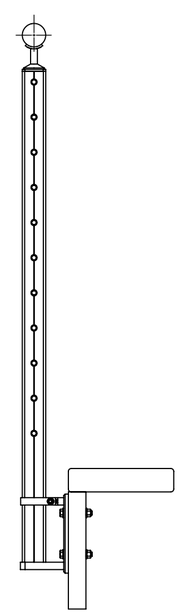

SC&R Stainless Cable & Railing

PROPRIETARY AND CONFIDENTIAL

THE INFORMATION CONTAINED IN THIS DRAWING IS THE SOLE PROPERTY OF STAINLESS CABLE AND RAILING®. ANY REPRODUCTION IN PART OR AS A WHOLE WITHOUT THE WRITTEN PERMISSION OF STAINLESS CABLE AND RAILING® IS PROHIBITED.

NOTES: UNLESS OTHERWISE SPECIFIED

1. DUAL DIMENSIONS SHOWN - INCHES [MM].
2. MACHINED SURFACES TO BE 63uIN MAX.
3. PART TO BE FREE OF BURRS AND SHARP EDGES.
4. ALL MATERIAL TO BE CLEAN, DEGREASED AND FREE OF ALL IMPURITIES.
5. ANY CHANGE MUST BE AUTHORIZED BY AN SC&R ENGINEER.

DIMENSIONS ARE IN INCHES
FRACTIONAL ±
ANGULAR: MACH ±
TWO PLACE DECIMAL ±
THREE PLACE DECIMAL ±

MATERIAL

FINISH

	NAME	DATE
DRAWN	SCR	05/09/23
ENG APPR.		
MFG APPR.		

COMMENTS:

TITLE:

FULL SSQ ASSEMBLY (INLINE)-FASCIA

SIZE	DWG. NO.	REV
C	SSQ_FLAT-FASCIA	01

SCALE: 1:10 | WEIGHT: | SHEET 1 OF 1